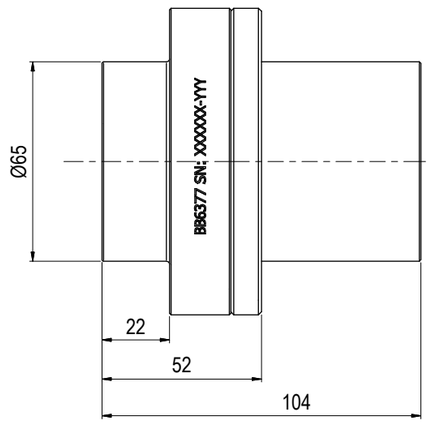

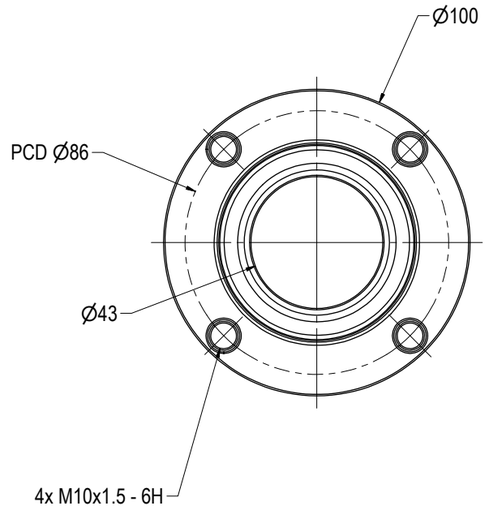

NOTE: 1
DESIGN CODE:
API 17H Type 1

NOTE: 2
TECHNICAL CLASSIFICATION:

Article Type:	001-Hot Stabs
Main Group:	1.03. Ø43 Hot Stab
Intermediate Group:	1.2.02. Receptacle
Sub Group:	1.2.6.01. Single

NOTE: 3
INTERFACE INFORMATION:

Pressure Rating Bar:	10
Design Water Depth:	NA
Material:	PEHD 1000
Weight in Air:	0,6 kg
Volume:	0,31 dm^3
Submerged Weight:	0,27 kg
Surface Area:	651 cm^2
Hydraulic:	NA
Mechanical:	4xM10@PCD 86
Electrical:	N/A
Com. & Protocol:	N/A

Rev.	Date	Reason for issue	Revision change	Made	Chk'd	Appr.
01	27.5.2021	9-IFU (Issued for Use)		HNJ	WTJ	HNJ

BLUE LOGIC

This Drawing is the Property of Blue Logic AS © and must Not be Loaned, Reproduced or Transferred to others without written Permission

Dwg Scale: NTS
Dwg Proj:
Dwg Format: A3

Drawing title: Ø43 SP Park Rec 10bar Long-term Assy

Drawing number: BB6378

Rev. 01